ADSL Alarm Micro Filter Z-A431UK

Broadband Alarm Filter for EN50131-1 compatibility.

Features

- Reliable alarm panel dial-out
- Uninterrupted DSL/HPN communication
- Over-voltage protection,
- Easy installation
- Compatibility with Full Rate DSL, G.Lite DSL, V.90 and Metallic Loop Testing (MLT)
- CE Mark Certification pending
- Broadband Compatable

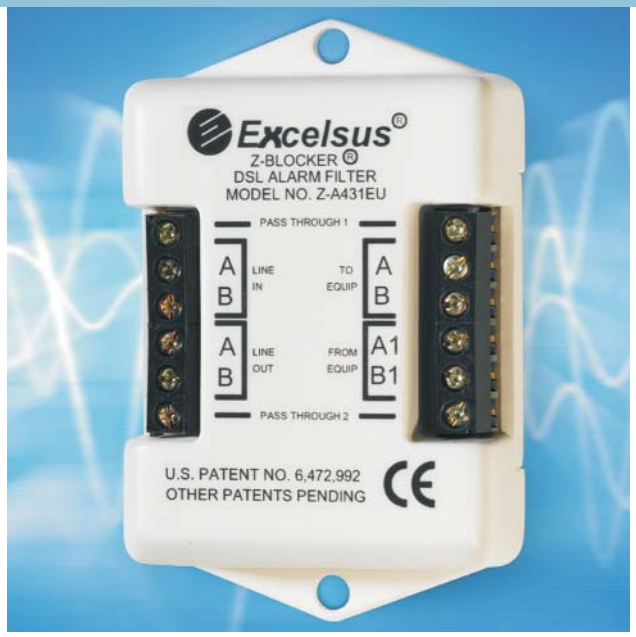

With the proliferation of DSL for high-speed Internet access in residences and small businesses, alarm dealers and service providers receive an increasing number of reports of interference between their customers. DSL service and alarm systems. When alarm panels have difficulty dialing out and reporting incidents in an emergency, customer service calls increase, customer confidence decreases and company profits can suffer.

tyco / Fire & Security

ADT

Tyco Safety Products are pleased to announce the launch of a new Broadband micro filter from Focus.

As the number of installed bases of Broadband increases, so too does the need for a professional, reliable interface between the intruder alarm and the broadband line. Since a broadband line incorporates the ability for both "voice channel" communication and also "data channel" it is very easily possible to use the voice channel for the intruder alarm signaling whilst still keeping available the data channel for computer use.

For more complex installation, particularly those required to meet EN 50131 the new hard-wired filter (608.009.196) is a more necessary solution. The (608.009.196) filter provides screw termination to the incoming line, to the alarm panel and provides further screw terminals to allow a "through line" carrying both the voice and data channels to further outlets in the installation. In addition, the filter incorporates line seizure of the "through line" voice channel and has lightning fuses for additional protection. This is the only DSL filter in the world designed solely for UK alarm systems.

The current filter (608.009.221) should be used in conjunction with the new filter and distributed through out the subscribers premises for filtering of other voice band equipment devices, such as dial up modems, fax/answering machines and telephones. These just need to be plugged into the sockets and then have the devices plugged into the filters.

Broadband

As DSL service becomes more commonplace and more affordable, more customers are choosing to use high speed internet and compatibility issues are arising. Worryingly, compatibility issues often occur without the knowledge of:
The alarm installer
The insurer
The customer

Z-A431EU

The Z-A431EU offers service providers an effective way to block interference between DSL and monitored alarm panels. It is the only DSL filter in the world designed solely for European alarm systems.

The Z-A431EU isolates high frequency DSL and HPN (Home Phone Network) signals from low-frequency voice and data communication.

Installation

The Z-A431EU can be installed in an alarm system at any time. It can be used on an existing installation when DSL is activated. It can be installed on a new installation when DSL is active or before DSL is active.

Retrospective Installations

The Z-A431EU can obviously be installed into existing systems as and when the customer chooses to have DSL activated. When DSL is activated, customers are generally aware of the necessity of standard filters. However, alarm panels are frequently neglected and the system is left as follows, in a simple installation (no line seizure).

In order for a monitored alarm to work effectively on a broadband line, the Z-A431EU must be installed in front of the alarm panel where it can filter the DSL signals.

Correctly Wired Simple DSL Installation

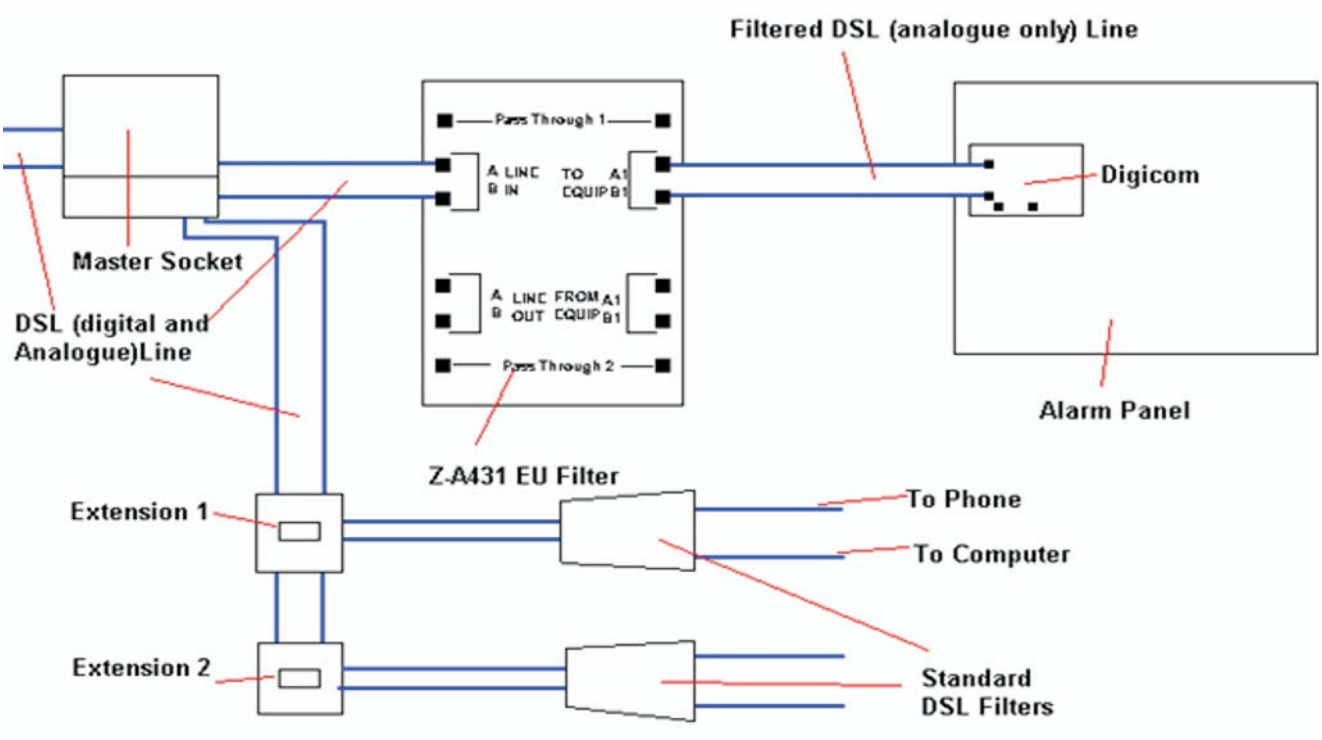

New Installations

All new alarm installations must meet EN50131. To do this, the alarm panel must be capable of line seizure. In order to achieve this, the alarm must be installed first in line in the system. The Z-A431EU allows alarm panels to meet EN50131. It is simply inserted between the telephone master socket and the alarm panel, allowing line seizure to continue, but also filtering the DSL signal from the alarm panel.

Alarm dealers and service providers have taken various approaches to solve this problem, such as:

- Installing a splitter or separate phone line, which is more costly than an Alarm Filter
- Installing a standard DSL filter at the alarm panel, which prevents the alarm panel from seizing a dial-out line if there is an emergency, or if the line is cut. In addition, a standard DSL filter will not ensure the highest possible data rates and does not filter all high-frequency disturbances such as those from a cordless phone.

None of these approaches provide a low-cost, reliable solution to the problems created by the coexistence of DSL service with an alarm system.

Introducing Z-BLOCKER® Alarm Panel DSL Filter

The Z-BLOCKER Z-A431UK provides alarm dealers and service providers with a low-cost alarm panel DSL filter that keeps customer service calls down and customer satisfaction up. The only DSL filter in the world designed solely for UK alarm systems, the ZA431UK isolates high-frequency DSL and HPN (Home Phone Network) signals from low-frequency voice and data communication to provide:

- Reliable alarm panel dial-out in case of emergency or cut line, even during highfrequency disturbances not related to DSL
- Uninterrupted DSL/HPN communication during alarm panel line seizure and incident reporting
- Screw down terminal connections for line seizure and cut-line protection in alarm panels, freeing phone line to report incidents
- Over-voltage protection, protecting alarm panel from power surges and reducing service calls
- Easy installation for service provider personnel. less than 15 minutes to insert filter between alarm panel and phone line and perform a system test
- Compatibility with Full Rate DSL, G.Lite DSL, V.90 and Metallic Loop Testing (MLT)
- CE Mark Certification pending

The Z-BLOCKER Z-A431UK can be used in conjunction with other Z-BLOCKER DSL filters such as the BT SIN-compliant model Z-420UK-A. These filters are distributed throughout the subscriber.s premises for filtering of other voice band equipment devices including wired/cordless telephones, fax/answering machines, dial-up modems, and automatic dialers. Excelsus is the number one selling brand of DSL filters worldwide.

Wiring Details

EN50131 compatible wiring should be carried out as below.

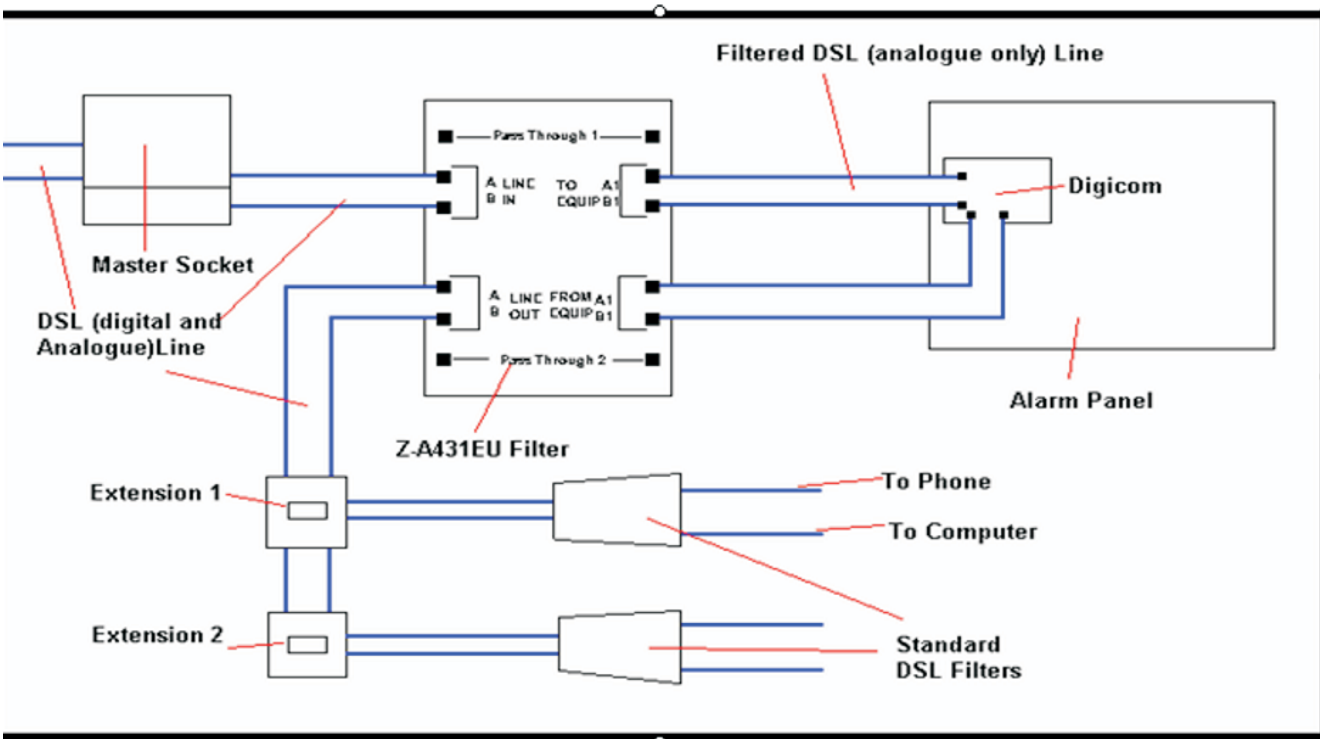

ADSL Alarm Micro Filter Z-A431UK

ADSL Insertion Loss (32 kHz to 1.1 MHz) 32 kHz to 300 kHz 300 kHz to 1.1 MHz	 <8dB <7dB
Insertion Loss (1000 Hz) Short loop Long loop	 <1.0dB <0.75dB
Insertion Loss (200 to 3400 Hz) Short loop Long loop	 +3.5dB to .1.5dB +3.5dB to .1.5dB
Insertion Loss (3400 to 4000 Hz) Short loop Long loop	 +10.0dB to .2.0dB +10.0dB to .1.5dB
DC Resistance in Ohms At Line port with POTS port shorted, Tip to Ring At POTS port with Line port shorted, Tip to Ring At any port with all other ports open, Tip/Ring to Ground	 <25 Ohms <25 Ohms >5M Ohms
Longitudinal Balance . Two Port 200 to 1000 Hz At 3000 Hz	 >58dB >53dB
Inter-Modulation Distortion at .9dB level Voice Band ADSL Band	 >57dB >60dB
Envelope Delay (600 to 3200 Hz) Short loop Long loop	 <200µs <200µs
Envelope Delay (3200 to 4000 Hz) Short loop Long loop	 <200µs <200µs
Return Loss ERL SRL-L SRL-H SRL-H (2200 to 3400 Hz single frequency)	 >6dB >5dB >3dB >2dB
Capacitance Tip to Ring Tip to Ring (without modem connected) At POTS port, Tip/Ring to Ground	 >20nF <115nF <1nF
DC Loop Current . Meets specifications between 0 and 100 milliamps DC	
Isolates dial pulses and on-hook/off-hook transitions from the digital subscriber line	
Dimensions: 102mm length x 54mm width x 23mm height CE Mark certification pending	

Ordering Information

Part number	Description
608.009.196	Focus hardwired broadband microfilter Z-A431EU
608.009.221	Focus broadband microfilter Z-420UKP2J

For further information on how ADT can help you, contact your local ADT Fire and Security office or phone free on 0800 010 999 or visit us at www.adt.co.uk

Head Office: ADT Fire and Security plc, Security House, The Summit, Hanworth Road, Sunbury-on-Thames, Middlesex TW16 5DB.

ADT reserves the right to modify or withdraw any product or service without notice

tyco Fire & Security

ADT

PSI167A Issue 1 August 2005